SenseFuture

TEC103
Temperature Controller
PRODUCT MANUAL

Striving for the Bright Future of Precision Optoelectronic Measurement.

CE FC ROHS

SenseFuture Technologies Co., Ltd.

00 Safety Notice

This section describes general safety information and safety precautions related to this product, in order to prevent personal injury caused by improper use and to prevent damage to this product or any product connected to it. To avoid potential hazards, always use this product as specified. Non-professional maintenance personnel must not open the enclosure for repair.

1. Safety Rules

- The product must be used strictly within the specified temperature and humidity ranges: temperature -55 to 60 °C; humidity 0 to 98% RH (non-condensing).
- This product is designed for use in a dry, well-ventilated indoor environment. Do not use it in damp locations or where it may be exposed to rain.

2. Operation and Protection Safety Requirements

📣**Installation/removal protection:** Before removing the temperature controller, completely disconnect the power supply. Do not touch terminals or electronic components, or apply impact, while the unit is powered. When reinstalling the controller, avoid direct contact between electronic components and the enclosure.

📣**ESD protection:** Before touching the controller, touch a grounded metal object to discharge static electricity from your body. During installation or removal, wear powder-free anti-static gloves to prevent sweat or oil from contaminating interfaces.

📣**Cleaning requirements:** Wipe the product surface only with standard-grade alcohol. Do not use corrosive cleaning agents such as paint thinner.

📣**Startup note:** The output turns on approximately 3 seconds after power-up (configurable if required). Consider this delay when configuring the control loop to avoid misjudging it as a fault.

📣**Application limitations:** Do not use this product in scenarios that may cause serious life or property risks unless such risks are mitigated through the overall system design. For programmable operations, the manufacturer assumes no responsibility for direct or indirect consequences caused by user programming.

3. Emergency Handling Procedure

- If the temperature controller emits smoke, abnormal odor, abnormal noise, or shows any other abnormal condition, immediately cut off the power supply. Do not continue using or disassemble it by yourself;
- Record the fault details, such as the abnormal condition, time of occurrence, and operating scenario;
- Contact SenseFuture official after-sales support immediately (technical support: rd@sensefuture.com).

Follow the guidance of qualified personnel for further handling. Unauthorized repair is prohibited to prevent secondary damage.

01 Product Function

The TEC103 temperature controller is mainly used for temperature measurement and control of optical components, such as lasers, detectors, and small sample chambers.

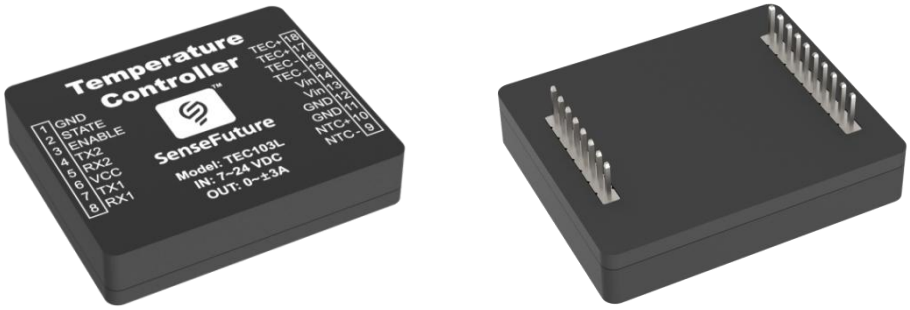

TEC103 Series Temperature Controller Product Image (product functions may be iterated)

02 Product Features

- Temperature measurement sensitivity: 0.1 mK; long-term measurement drift (24 h): <1 mK.
- Temperature control stability: ±0.001°C (depending on the controlled object and parameters), suitable for most applications, including demanding precision temperature control of semiconductor lasers.
- Selectable bipolar or unipolar output.
- Maximum temperature change rate can be limited.
- Supports thermistor temperature sensors (NTC).
- Compact module design for easy integration into circuit board designs.
- Built-in PCB over-temperature protection for reliable operation.
- Supports direct parameter setting through a display control module. Settings are retained after power-off, making production operation convenient.
- Provides complete serial control commands as an open platform.

03 Specifications

Parameter	Model		
	TEC103D	TEC103L	TEC103
Supported Sensor	NTC		
Temperature Measurement Range	-270~850℃		
Measurement Sensitivity	0.01℃	0.001℃	0.0001℃

Measurement Drift Caused by Ambient Temperature [1]	0.0001℃/℃		
Best Temperature Control Stability (related to your temperature control fixture)	**±0.1℃**	**±0.01℃**	**±0.001℃**
Communication Interface	TTL serial / RS485 serial (supports both Modbus and ASCII protocols)		
Supply Voltage Range	7 - 24 V (short-term maximum voltage: 28 V)		
Output Polarity	Selectable bidirectional, unidirectional, or communication-specified output		
Number of Output Channels	1		
TEC Terminal Output Voltage Range	0 - ±90% * Vin V		
TEC Terminal Output Current Range	**0 - ±3 A**		
Output Current Limit	±4 A		
PWM Output Frequency Range	0.1 - 5 kHz (Default: 10 Hz)		
Operating Ambient Temperature Range	-55 - 60°C		
Operating Ambient Humidity Range	0 - 98% RH		
Cooling Requirement	No additional cooling required within the rated operating range		
Protection Features	Multiple protections including overvoltage, overcurrent, and overtemperature; power-off memory		
PID Parameters	Auto-tuning / user-adjustable		
Dimensions	46.3*38.8*8.9 mm (±0.1 mm), excluding pins		
Weight	Approx. 30 g		

Note: [1] Measurement drift of the board was tested using the 10K B3950 temperature calculation model.

04 Interface Description

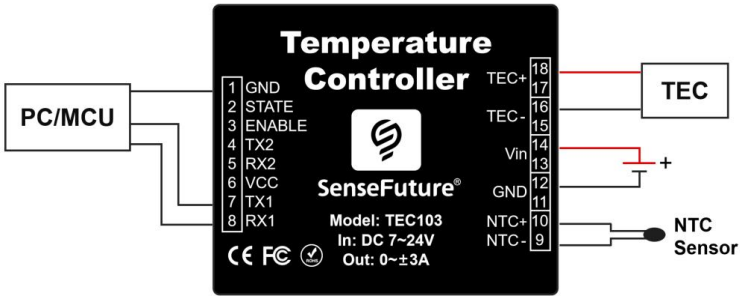

TEC103/TEC103L Temperature Controller Wiring Diagram

TEC103/TEC103L Pin Definition Table

Pin No.	Pin Name	Pin Type	Pin Description (High level: 3.3 V; low level: 0 V)
1	GND	Input	Power input negative terminal (low current).
2	STATE	Output	Controller over-temperature alarm signal output. High level: (1) the controller temperature exceeds its internal over-temperature threshold; (2) Channel 1 or 2 sensor temperature exceeds the configured high/low threshold range. Low level: no over-temperature abnormality.
3	ENABLE	Input	Output enable pin. High level (default): enable temperature-control output; low level: disable temperature-control output.
4	TX2	Output	Serial port 2 transmit pin, TTL level, used to connect the display control module.
5	RX2	Input	Serial port 2 receive pin, TTL level, used to connect the display control module.
6	VCC	Output	3.3 V voltage output, used to connect the display control module. Other uses are not recommended.
7	TX1	Output	Serial port 1 transmit pin, TTL level, used to connect PC control software. Data bits: 8; stop bit: 1; parity: None; baud rate: 38400.
8	RX1	Input	Serial port 1 receive pin, TTL level, used to connect PC control software. Data bits: 8; stop bit: 1; parity: None; baud rate: 38400.
9	NTC-	Input	Thermistor (NTC) interface, compatible with thermistors of different resistances. Wiring is non-polarized.
10	NTC+	Input	Thermistor (NTC) interface, compatible with thermistors of different resistances. Wiring is non-polarized.
11 12	GND	Input	Power input negative terminal (high current).
13 14	Vin	Input	Power input positive terminal; input range: 7 to 24 V.
15 16	TEC-	Output	Temperature-control current output negative terminal, typically connected to the negative terminal of the thermoelectric cooler (TEC).
17 18	TEC+	Output	Temperature-control current output positive terminal, typically connected to the positive terminal of the thermoelectric cooler (TEC).

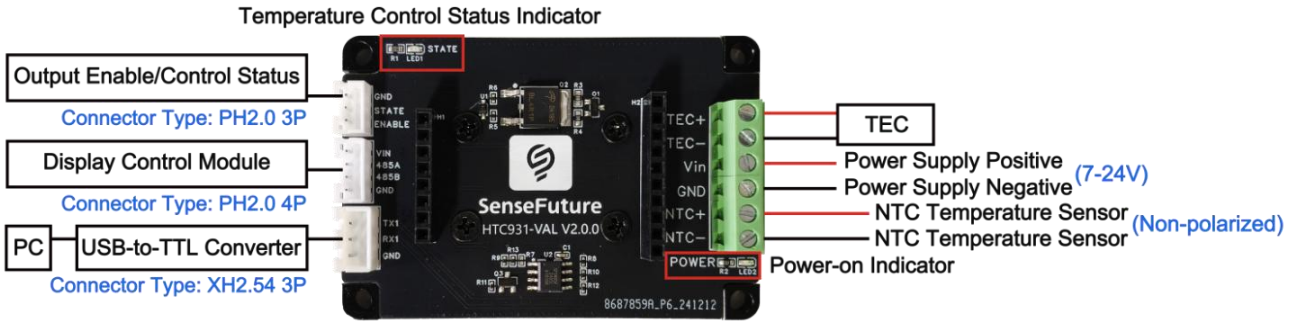

TEC103/TEC103L Adapter Board Wiring Diagram

05 Outline Dimensions (Tolerance: ±0.1 mm)

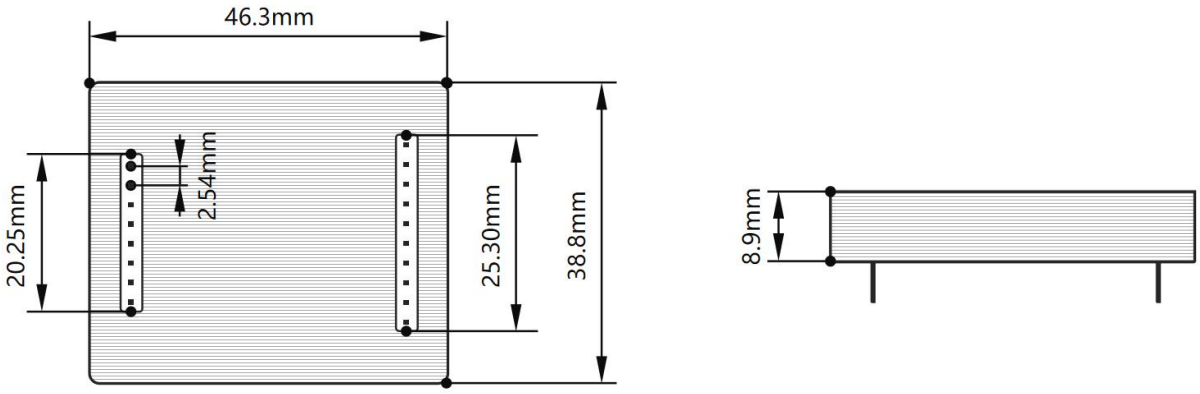

TEC103 Series Temperature Controller Dimension Drawing

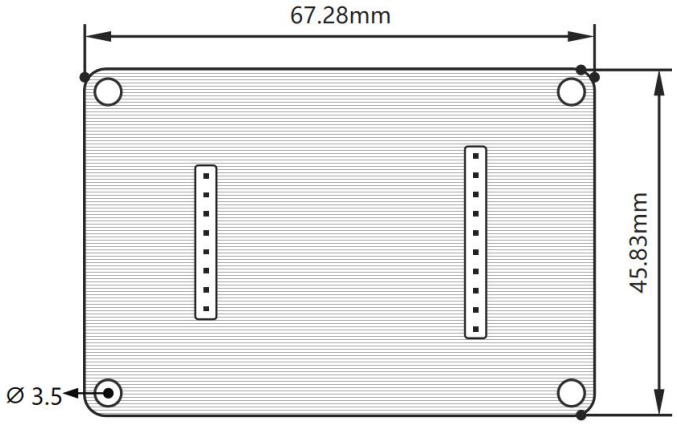

TEC103 Series Evaluation Board Dimension Drawing

06 PC Software

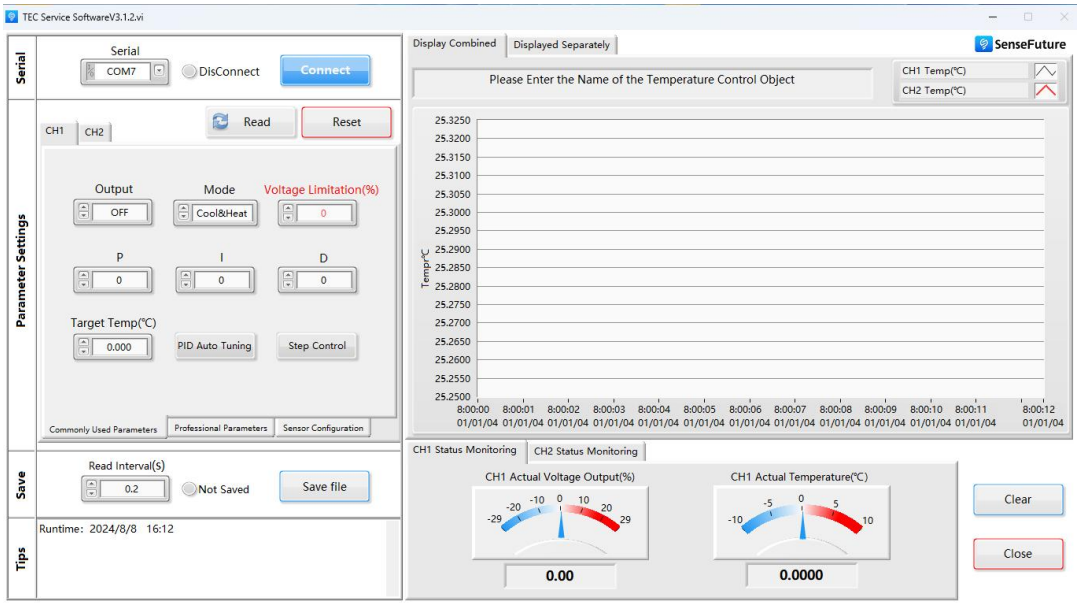

PC software, communication protocols, and other documents are available for download on the product detail pages of SenseFuture website(www.sensefuture.com).

07 Quick Start Steps

1. Required Materials

Controller kit (temperature controller, NTC temperature sensor, USB-to-TTL communication cable), heating/cooling device (such as a thermoelectric cooler), switching power supply, computer, screwdriver, and several wires.

2. Operating Procedure

(1) Wiring (using a NTC sensor and thermoelectric cooler as an example)

- **Step 1:** Connect the NTC temperature sensor to the controller NTC+ and NTC- pins. Polarity is not distinguished.
- **Step 2:** Connect the thermoelectric cooler to the controller TEC output interface. Pay attention to polarity.
- **Step 3:** Connect the positive and negative terminals of the switching power supply to the controller VIN and GND pins. Pay attention to polarity. Do not connect to the 220 V mains yet.
- **Step 4:** Connect the USB-to-TTL communication cable to the controller, but do not connect it to the computer yet.
- **Step 5:** After confirming that the wiring is correct, connect to the 220 V mains.

(2) Software Settings (install the serial driver before first use)

- **Step 1:** COM port selection: click the COM port drop-down list and note the existing ports. After

connecting the communication cable to the computer, click Refresh, select the newly added COM port, and click Connect. The software currently supports 38400-baud serial communication only. Modify the baud rate if RS485 communication is used.

- **Step 2:** Successful connection indication: the “Open Serial Port” button changes to “Close Serial Port”.
- **Step 3:** Sensor configuration: enter R0 = 10 kΩ and B = 3950 for the NTC temperature sensor. For other sensors, refer to the tutorial for selecting calculation models based on sensor parameters.
- **Step 4:** Maximum output voltage percentage: maximum output voltage percentage < rated voltage of the TEC-side device / supply voltage. If both the maximum voltage of the thermoelectric cooler and the supply voltage are 12 V, set the maximum output voltage percentage to 90% to avoid damage.
- **Step 5:** Start temperature control: enter the target temperature and enable output. The controller starts temperature control.
- **Step 6:** PID parameter setting: click the PID auto-tuning button and wait for auto-tuning (this may take several minutes depending on the heat sink size of the controlled object), or manually adjust PID parameters (refer to the PID quick tutorial).

08 Temperature Control System Customization Service

We have comprehensive temperature-control solution capabilities and have customized temperature-control systems for research institutes and universities. For customized temperature-control systems, please contact official customer service (rd@sensefuture.com).

Appendix 1 Typical Application Cases

1.1 DFB Semiconductor Laser Temperature Control Case

- Controlled object: a domestic DFB laser, wavelength 1370 nm, power 10 mW
- Temperature sensor: built-in NTC 10K B3950 inside the laser
- Heating/cooling device: built-in thermoelectric cooler inside the laser, 1.5 A, 2.6 V
- Controller brand/model: SenseFuture TEC103
- Target temperature: 25°C
- Controller parameter settings: supply voltage 12 V; maximum output voltage percentage 20% (12 V x 20% = 2.4 V); PID parameters: P = 200, I = 100, D = 0; forward dead-zone duty cycle 0.005%; reverse dead-zone duty cycle 0.005%.
- Measured results: temperature control stability ±0.0005°C (5-hour test, ambient 25 ± 1.5°C); ±0.0005°C (24-hour test, ambient 25 ± 1.5°C).

7. Type 2 Package Drawing&PIN-OUT Definition(Unit:mm)

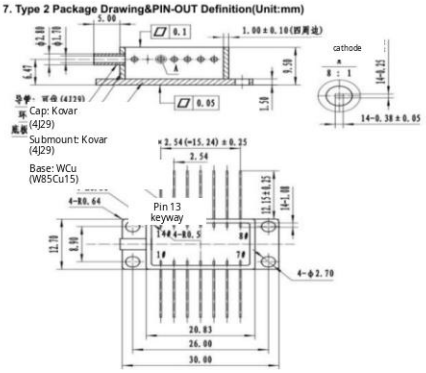

PIN	Description	PIN	Description
1	TEC(+)	14	TEC(−)
2	Thermistor	13	Case Ground
3	PD Monitor Anode (-)	12	NC
4	PD Monitor Cathode (+)	11	Laser Cathode (-)
5	Thermistor	10	Laser Anode (+)
6	NC	9	NC
7	NC	8	NC

3. Absolute Maximum Ratings:

Parameter	Symbol	Condition	Min.	Max.	Unit
Laser forward DC current	-	-	-	120	mA
LD Reverse voltage	V_{RLD}	CW	-	2.0	V
TEC voltage	V_{TEC}	CW	-	2.6	V
TEC Current	I_{TEC}	CW	-	1.5	A
Lead solder temperature/Time	-	-	-	260/10	℃/S
Operating temperature	T_{OP}	Case temperature	-40	+85	℃
Storage temperature	T_{STG}	Ambient temperature	-40	+85	℃

4. Optical-Electro Characteristics(T=25℃, I_F =I_{OP}):

Parameter	Symbol	Condition	Min.	Typ.	Max.	Unit
Operating wavelength	λ_C	CW, 25℃	λ_C-3	λ_C	λ_C+3	nm
Optical output power	P_F	-	6	10	-	mW
Threshold current	I_{TH}	25℃	-	8	15	mA
Operating current	I_{OP}	CW	-	-	90	mA
Operating voltage	V_{OP}	25℃	-	1.1	2.0	V
Side mode suppression ratio	SMSR	-	35	40	-	dB
Optical isolation	I_{ISO}	25℃	35	-	-	dB
Spectral width (-20 dB)	Δλ	-	-	0.1	1.0	nm
Polarization extinction ratio	ER	PM fiber	18	-	-	dB
Wavelength temp. coefficient	Δλ/ΔT	-	-	0.08	0.12	nm/℃

DFB Laser Dimensions and Basic Parameter Information

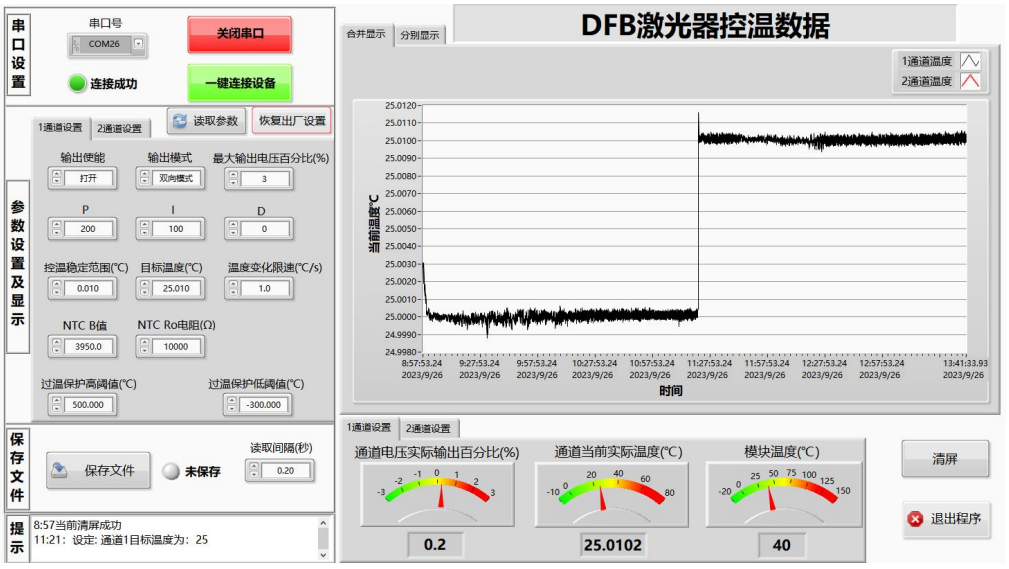

Measured DFB Laser Temperature Control Data

1.2 ICL Semiconductor Laser Temperature Control Case

Performance is similar to Appendix 1.1. Detailed case sharing will be updated later. For a specific solution, please contact technical support at rd@sensefuture.com for a quotation.

1.3 LD Laser Temperature Control Case

Performance is similar to Appendix 1.1. Detailed case sharing will be updated later. For a specific solution, please contact technical support at rd@sensefuture.com for a quotation.

1.4 QCL Semiconductor Laser Temperature Control Case

- Controlled object: QCL laser, wavelength 4332 nm, power 100 mW
- Temperature sensor: built-in NTC 10K B3950 inside the laser
- Heating/cooling device: built-in thermoelectric cooler inside the laser, 7 V
- Controller brand/model: SenseFuture TEC103
- Target temperature: 47°C
- Controller parameter settings: supply voltage 12 V; maximum output voltage percentage 50% (12 V x 50% = 6 V); PID parameters: P = 5000, I = 500, D = 0.
- Measured results: temperature control stability ±0.001°C (1-hour test).

For a specific solution, please contact technical support at rd@sensefuture.com for a quotation.

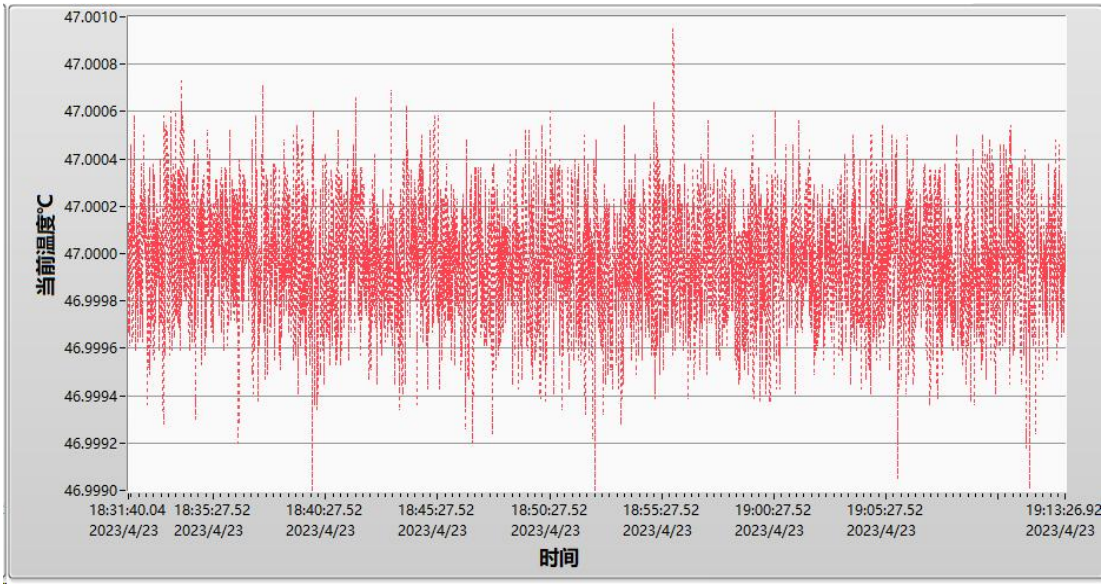

Long-Term QCL Laser Temperature Control Data

1.5 MCT Detector Temperature Control Case

- Controlled object: MCT detector, VIGO brand
- Temperature sensor: built-in NTC 2K B3950 inside the detector
- Heating/cooling device: built-in thermoelectric cooler inside the detector, 1 V, 100 mA



4TE-TO66

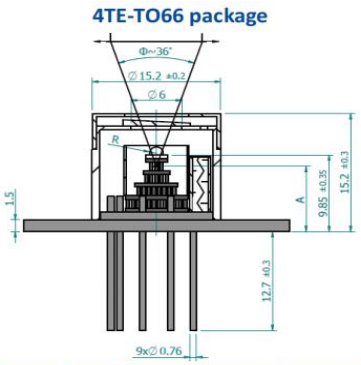

Parameter	Value	
Immersion microlens shape	hyperhemisphere	
Optical area A_o, mm×mm	0.5×0.5	1×1
R, mm	0.5	0.8
A, mm	8.35±0.40	7.45±0.40

Φ – acceptance angle
R – hyperhemisphere microlens radius
A – distance from the bottom of 4TE-TO66 header to the focal plane

- Controller brand/model: SenseFuture TEC103
- Target temperature: 25°C
- Controller parameter settings: supply voltage 9V; maximum output voltage percentage 3% (9x 3%= 0.27V),

PID parameters: P = 15, I = 5, D = 0.

- Measured results: temperature control stability ±0.0025°C (14-hour test).

For a specific solution, please contact technical support at rd@sensefuture.com for a quotation.

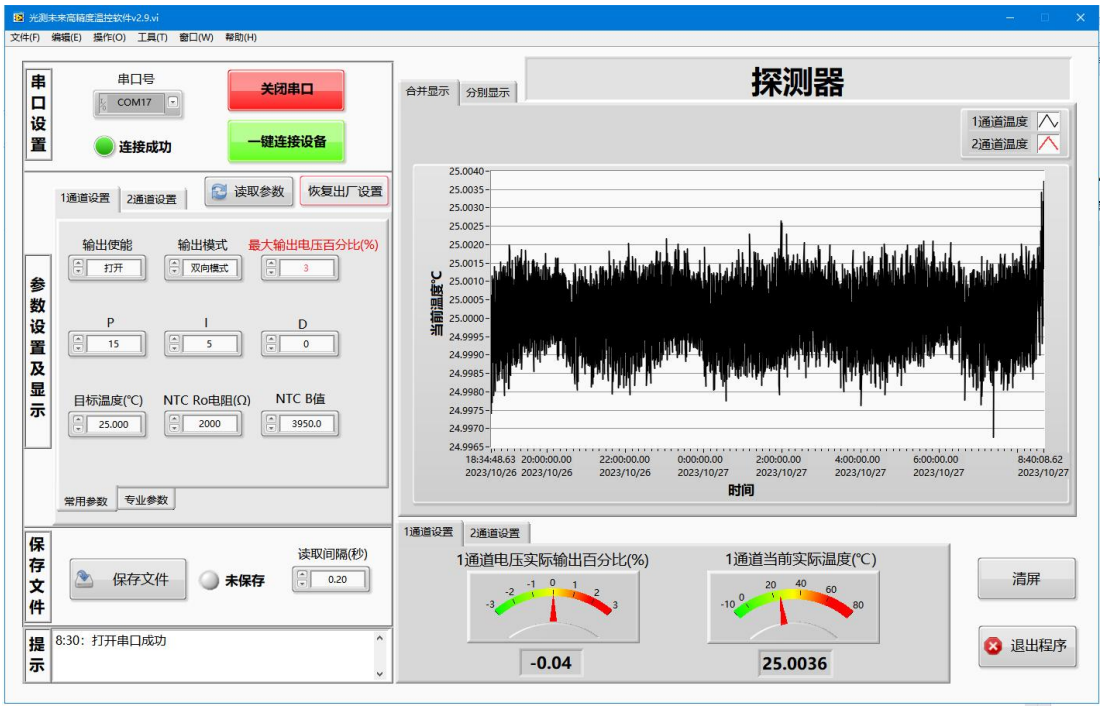

MCT Detector Temperature Control Data

Customers and Partners

Universities and Research Institutes

清華大學 Tsinghua University
北京大學 PEKING UNIVERSITY
復旦大學 FUDAN UNIVERSITY
上海交通大學 SHANGHAI JIAO TONG UNIVERSITY
浙江大學 ZHEJIANG UNIVERSITY
中国科学院大学 University of Chinese Academy of Sciences
中国计量科学研究院 National Institute of Metrology, China
THE HONG KONG POLYTECHNIC UNIVERSITY 香港理工大學
电子科技大学 University of Electronic Science and Technology of China
深圳大学 SHENZHEN UNIVERSITY
Imperial College London
SFU SIMON FRASER UNIVERSITY
PRINCETON UNIVERSITY
Berkeley UNIVERSITY OF CALIFORNIA
NUS National University of Singapore
Caltech
中国科学院半导体研究所 Institute of Semiconductors, Chinese Academy of Sciences
中国科学院 长春光学精密机械与物理研究所 Changchun Institute of Optics, Fine Mechanics and Physics, Chinese Academy of Sciences

High-Tech Enterprises

COHERENT
TESLA
Zolix 卓立汉光
ciena
舜宇光学科技 SUNNY OPTICAL TECHNOLOGY
东微半导体 ORIENTAL SEMICONDUCTOR
Google
MAX 创鑫激光
ByteDance 字节跳动
Midea
CYGNUS 赛纳生物
科瑞技术
KEDE CNC
QDoSoN 玻色量子
国仪量子 CIQTEK
Raytron 睿创微纳
Hanwei 汉威科技集团
Fraunhofer IPMS
Sieyuan
ThermoFisher SCIENTIFIC
大族激光 HAN'S LASER
易瑞 BIOEASY 股票代码 300942
Yawei 亚威
NANNAR 诺丽科技
ZOLWELL TECHNOLOGIES
HIKVISION 海康威视
menovex® 密尔医疗
BGI 华大
特仪科技 TEYITECH
SDL 雪迪龙

Revision History

Revision History	Change description	Change date	Reviewed by
1.0	Initial version	2024/3/1	YL/WYR
1.0-1.1.0	Updated	2026/5/20	WYR
1.1.0-1.1.1	Updated adapter coard wiring diagram Updated specifications	2026/10/26	WYR

Website & Store: www.sensefuture.com

Email: sales@sensefuture.com / rd@sensefuture.com

Tel: +86 18718688108

Address: Room 1308, Building A1, Sanhuan Technology Building, Fenghuang Subdistrict, Guangming District, Shenzhen, China

SenseFuture

Original Aspiration Shapes the Future;
Innovation Creates Value;
Sharing Brings People Together;

We look forward to win-win cooperation with you!

SenseFuture Technologies Co., Ltd.