SenseFuture

TEC207/215

Temperature Controller

PRODUCT MANUAL

Striving for the Bright Future of Precision Optoelectronic Measurement.

SenseFuture Technologies Co., Ltd.

00 Safety Notice

This section describes general safety information and safety precautions related to this product, in order to prevent personal injury caused by improper use and to prevent damage to this product or any product connected to it. To avoid potential hazards, always use this product as specified. Non-professional maintenance personnel must not open the enclosure for repair.

1. Safety Rules

- The product must be used strictly within the specified temperature and humidity ranges: temperature -55 to 60 ℃; humidity 0 to 98% RH (non-condensing).
- This product is designed for use in a dry, well-ventilated indoor environment. Do not use it in damp locations or where it may be exposed to rain.

2. Operation and Protection Safety Requirements

📣**Installation/removal protection:** Before removing the temperature controller, completely disconnect the power supply. Do not touch terminals or electronic components, or apply impact, while the unit is powered. When reinstalling the controller, avoid direct contact between electronic components and the enclosure.

📣**ESD protection:** Before touching the controller, touch a grounded metal object to discharge static electricity from your body. During installation or removal, wear powder-free anti-static gloves to prevent sweat or oil from contaminating interfaces.

📣**Cleaning requirements:** Wipe the product surface only with standard-grade alcohol. Do not use corrosive cleaning agents such as paint thinner.

📣**Startup note:** The output turns on approximately 3 seconds after power-up (configurable if required). Consider this delay when configuring the control loop to avoid misjudging it as a fault.

📣**Application limitations:** Do not use this product in scenarios that may cause serious life or property risks unless such risks are mitigated through the overall system design. For programmable operations, the manufacturer assumes no responsibility for direct or indirect consequences caused by user programming.

3. Emergency Handling Procedure

- If the temperature controller emits smoke, abnormal odor, abnormal noise, or shows any other abnormal condition, immediately cut off the power supply. Do not continue using or disassemble it by yourself;
- Record the fault details, such as the abnormal condition, time of occurrence, and operating scenario;
- Contact SenseFuture official after-sales support immediately (technical support: rd@sensefuture.com).

Follow the guidance of qualified personnel for further handling. Unauthorized repair is prohibited to prevent secondary damage.

01 Product Functions

The TEC207/215 series temperature controller is mainly used for temperature measurement and temperature control of large sample chambers.

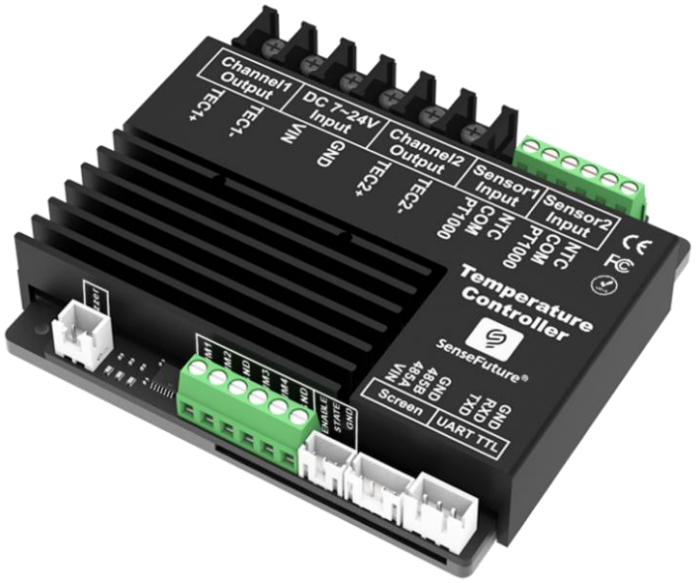

TEC207/215 Series Temperature Controller Product Image (product functions may be iterated)

02 Product Features

- Temperature measurement resolution: 0.0001℃; long-term measurement drift (24 h): <0.001 ℃.
- **Temperature-control stability up to ±0.001** ℃ (depending on the controlled object and parameters), meeting most application requirements, including stringent precision temperature control for semiconductor lasers.
- Supports blackbody radiation applications and ambient-relative temperature control mode.
- Supports Channel 2 tracking Channel 1 output mode.
- Selectable bipolar or unipolar output.
- Maximum temperature change rate can be limited.
- Supports thermistor temperature sensors (NTC).
- Supports high-power output (up to 24 V/15 A per channel; two channels can be combined for 30 A output).
- Multiple protection features, including overvoltage, overcurrent, and overtemperature.
- Parameters can be set directly through the display module or PC control module. Settings are retained after power-off.
- Supports two communication interfaces: TTL serial and RS485.
- Supports ASCII and Modbus communication protocols as an open platform.
- Supports solid-state relays.

03 Specifications

Parameter	Model					
	TEC207D	TEC207L	TEC207	TEC215D	TEC215L	TEC215
Supported sensors	NTC、PT1000/PT100					
Measurable temperature range	-270 - 850℃					
Measurement resolution	0.01℃	0.001℃	0.0001℃	0.01℃	0.001℃	0.0001℃
Measurement drift caused by ambient temperature[1]	0.0001℃/℃					
Best temperature-control stability(related to your temperature-control fixture)	**±0.1℃**	**±0.01℃**	**±0.001℃**	**±0.1℃**	**±0.01℃**	**±0.001℃**
Communication method	TTL / RS485 serial (supports Modbus and ASCII protocols)					
Supply voltage range	7 - 24 V (short-term maximum limit: 28 V)					
Output polarity	Bidirectional, unidirectional, or communication-specified output					
Number of output channels	2					
TEC Terminal Output Voltage Range	0 - ±90% * Vin V					
TEC Terminal Output Current Range (SSR: solid-state relay)	**0 - ±7 A/channel**			**0 - ±15 A/channel 0 - ±80A/SSR**		
Output current limit	±10A			±20A		
PWM Output Frequency Range	0.1 - 5 kHz (Default: 10 Hz)					
Operating ambient temperature range	-55 - 60℃					
Operating ambient humidity range	0 - 98%RH					
Cooling requirement	When current exceeds 12 A, add cooling as needed.					
Protection Features	Multiple protections including overvoltage, overcurrent, and overtemperature; power-off memory					
PID parameters	Auto-tuning / user adjustable					
Dimensions	94.3*79.5*17.8 mm(±0.2 mm)					
Weight	Approx. 240 g					

Note: [1] The board measurement drift was tested using the 10K B3950 temperature calculation model.

04 Interface Description

1.Temperature Controller Pin Description

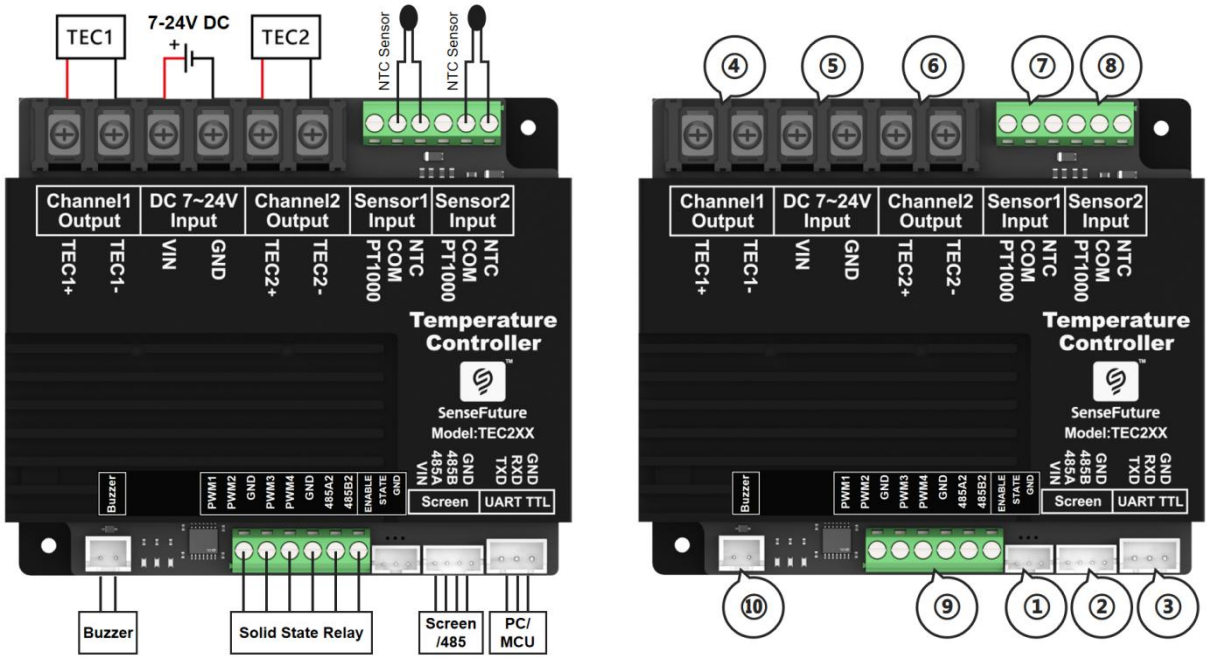

TEC207/215 Series Temperature Controller Wiring Diagram

Temperature Controller Pin Description Table

	Pin name	Pin type	Pin description (High level: 3.3 V; low level: 0 V)	Terminal model
①	ENABLE	Input	Temperature controller enable terminal. High level: the controller can output normally. Low level: output is disabled.	PH2.0 3P
	STATE	Output	Over-temperature alarm signal output of the temperature controller. High level: (1) the controller temperature exceeds its over-temperature threshold; or (2) the sensor temperature of channel 1 or 2 is outside its upper/lower temperature threshold range. Low level: no over-temperature abnormality.	
	GND	Input	Power input negative terminal (low current).	
②	VIN	Output	Power output positive terminal (directly connected to the power VIN terminal).	PH2.0 4P
	485A	Output	RS485 signal line A. Data bits: 8; stop bit: 1; parity: None; baud rate: 9600.	
	485B	Output	RS485 signal line B. Data bits: 8; stop bit: 1; parity: None; baud rate: 9600.	
	GND	Input	Power input negative terminal (low current). Connecting GND is recommended for RS485 communication.	
③	TXD	Output	Serial transmit terminal, TTL level, used to connect PC control software. Data bits: 8; stop bit: 1; parity: None; baud rate: 38400; signal level: 3.3 V.	XH2.54 3P
	RXD	Input	Serial receive terminal, TTL level, used to connect PC control software. Data bits: 8; stop bit: 1; parity: None; baud rate: 38400; signal level: 3.3 V.	

	GND	Input	Power input negative terminal (low current).	
④	TEC1+	Output	Temperature-control current positive output, usually connected to the positive terminal of the TEC.	-
	TEC1-	Output	Temperature-control current negative output, usually connected to the negative terminal of the TEC.	
⑤	VIN	Input	Power input positive terminal, input range: 7-24 V.	-
	GND	Input	Power input negative terminal (high current).	
⑥	TEC2+	Output	Temperature-control current positive output, usually connected to the positive terminal of the TEC.	-
	TEC2-	Output	Temperature-control current negative output, usually connected to the negative terminal of the TEC.	
⑦	PT	Input	Platinum RTD (Pt1000) interface. Please contact technical support before purchase.	-
	COM	Input	Common interface for the platinum RTD (Pt1000) and thermistor (NTC).	
	NTC	Input	Thermistor (NTC) interface.	
⑧	PT	Input	Platinum RTD (Pt1000) interface. Please contact technical support before purchase.	-
	COM	Input	Common interface for the platinum RTD (Pt1000) and thermistor (NTC).	
	NTC	Input	Thermistor (NTC) interface.	
⑨	PWM1	Output	Solid-state relay connection terminal 1. Default frequency: 10 Hz; adjustable.	-
	PWM2	Output	Solid-state relay connection terminal 2. Default frequency: 10 Hz; adjustable.	
	GND	Input	Power input negative terminal (low current).	
	PWM3	Output	Solid-state relay connection terminal 3. Default frequency: 10 Hz; adjustable.	
	PWM4	Output	Solid-state relay connection terminal 4. Default frequency: 10 Hz; adjustable.	
	GND	Input	Power input negative terminal (low current).	
⑩	VCC	Output	Buzzer alarm positive terminal. Outputs high level when the temperature controller has an error.	XH2.54 2P
	GND	Output	Buzzer alarm negative terminal.	

2. Extended use with an external solid-state relay to drive a TEC: When the TEC215 series controller is connected to a high-power load, it can control the load through a solid-state relay connected to the PWM terminal.

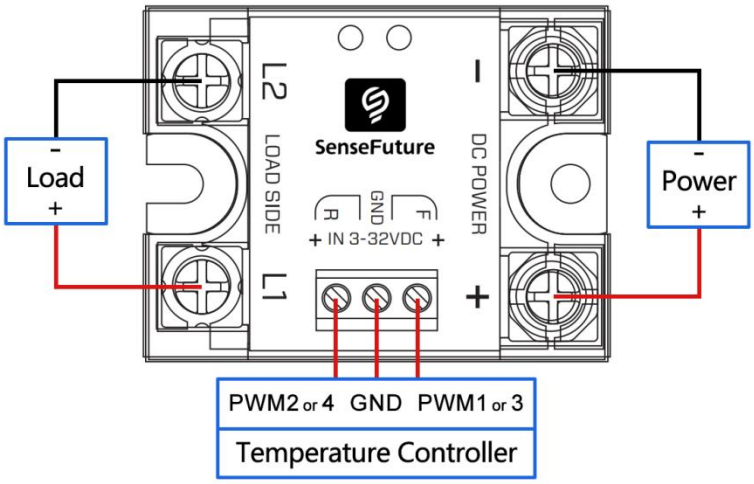

Channel 1 or Channel 2 Solid-State Relay Wiring Diagram

- For DC devices, select a DD-type SSR; for AC devices, select a DA-type SSR;
- The SSR voltage must match the rated voltage range of the load, and its current rating must be greater than the total load current.

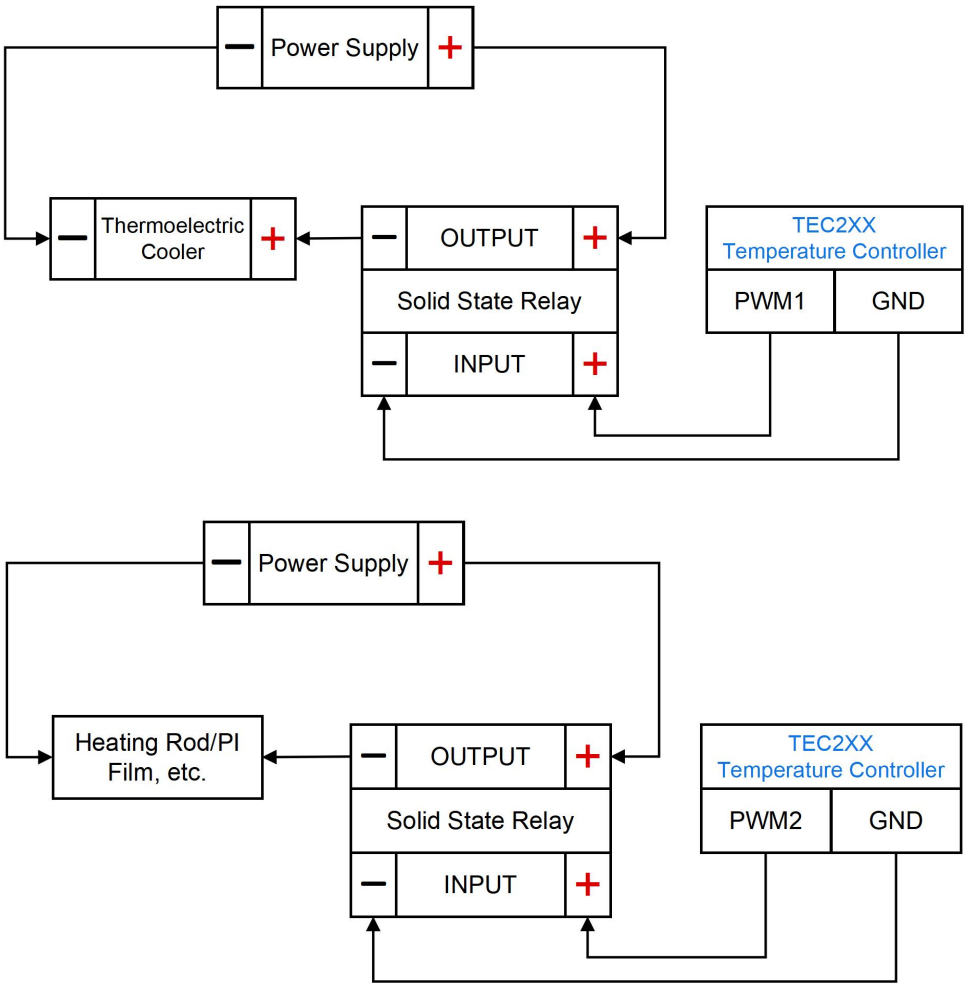

Solid-State Relay Wiring Diagram for Cooling Only (top) and Heating (bottom)

05 Outline Dimensions (Tolerance: ±0.2 mm)

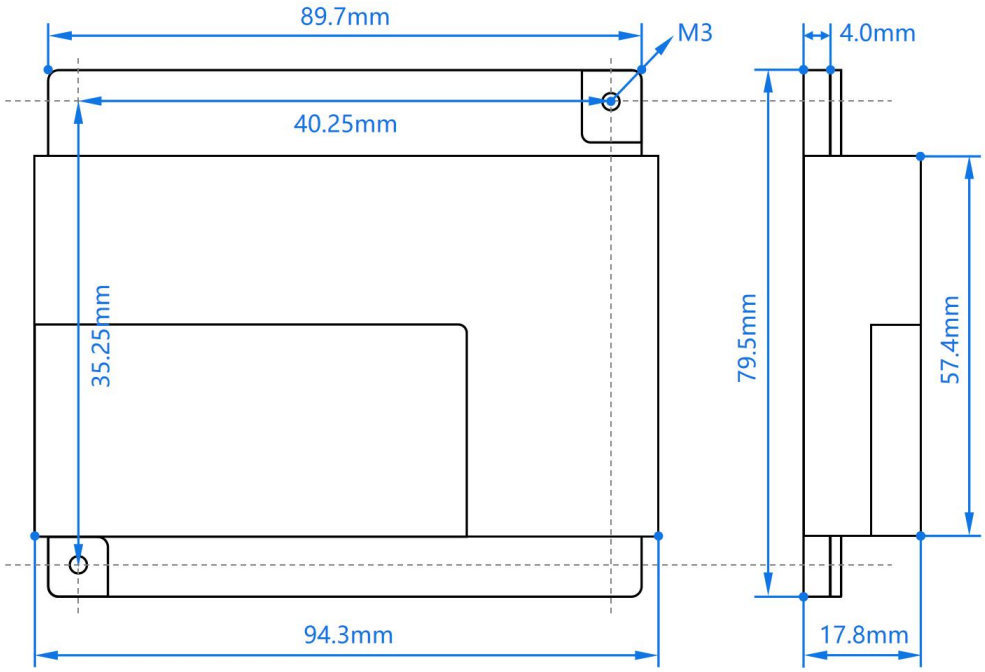

06 PC Software

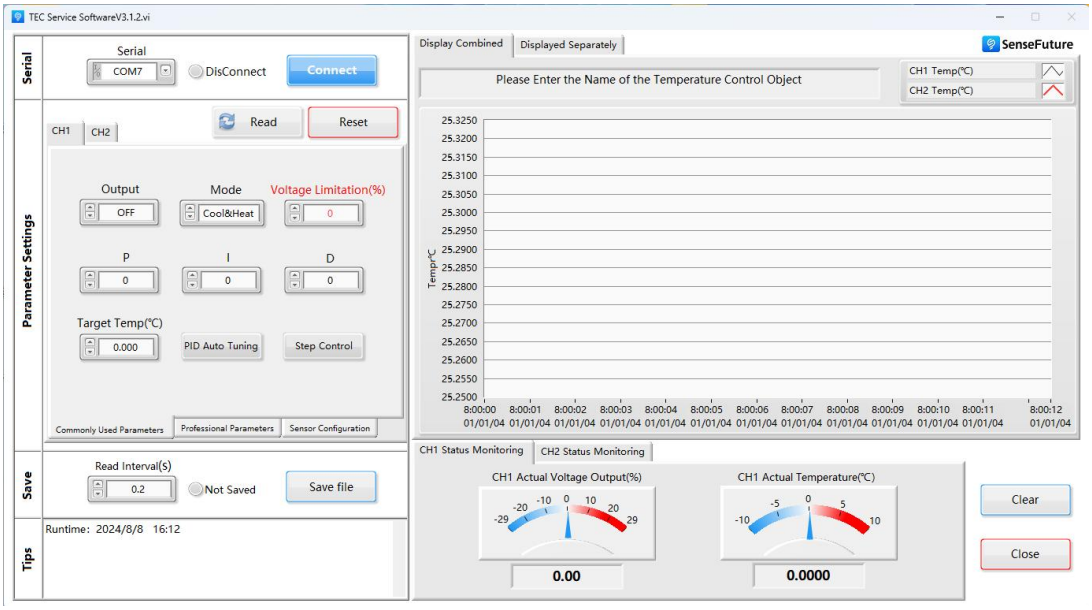

PC software, communication protocols, and other documents are available for download on the product detail pages of SenseFuture website(www.sensefuture.com).

07 Quick Start Steps

1. Required Materials List

Temperature controller kit (temperature controller, NTC temperature sensor, USB-to-TTL communication cable), heating/cooling device (such as a TEC), switching power supply, computer, screwdriver, and several wires.

2. Operating Procedure

(1) Wiring (using a NTC sensor and TEC as an example)

- **Step 1:** NTC temperature sensor connection: Connect the sensor to the NTC and COM terminals of the controller. Polarity is not distinguished.
- **Step 2:** TEC connection: Connect the TEC to the controller channel 1 output interface TEC1. Pay attention to polarity.
- **Step 3:** Switching power supply connection: Connect the positive and negative terminals to the VIN and GND pins of the controller. Pay attention to polarity. Do not connect the 220 V mains power yet.
- **Step 4:** USB-to-TTL communication cable connection: Connect it to the controller first, but do not connect it to the computer yet.
- **Step 5:** After confirming that the wiring is correct, connect to the 220 V mains.

(2) Software settings (install the serial port driver first before initial use)

- **Step 1:** Serial port selection: Click the serial port drop-down box and note the existing serial ports. After connecting the communication cable to the computer, click Refresh, select the newly added serial port, and click Serial Port Connect. (The software currently supports serial communication at 38400 baud only; if RS485 communication is used, the baud rate must be changed.)
- **Step 2:** Successful connection indicator: the Open Serial Port button changes to Close Serial Port.
- **Step 3:** Sensor configuration: Enter R0 = 10 kOhm and B = 3950 for the NTC temperature sensor. For other sensor configurations, refer to the tutorial on selecting different models based on sensor parameters.
- **Step 4:** Maximum output voltage percentage setting: Maximum voltage output percentage < rated voltage of the device at the TEC terminal / supply voltage. For example, when both the maximum TEC voltage and the supply voltage are 12 V, the maximum output voltage percentage can be set to 90% to avoid damage.
- **Step 5:** Start temperature control: Enter the target temperature value and enable output. The controller starts temperature control.
- **Step 6:** PID parameter setting: Click the PID auto-tuning button and wait for auto-tuning to complete (this may take several minutes depending on the heat-sink size of the controlled object), or manually adjust the PID parameter values (refer to the simple PID tutorial).

08 Temperature Control System Customization Service

We have comprehensive temperature-control solution capabilities and have customized temperature-control systems for research institutes and universities. For customized temperature-control systems, please contact official customer service (rd@sensefuture.com).

Appendix 1 Typical Application Cases

1.1 Gas Absorption Chamber Temperature Control Case

- Controlled object: An 80 cm long, 4.5 cm diameter aluminum alloy gas chamber with a hollow interior and gas inlet/outlet ports at both ends
- Temperature sensor: SenseFuture matched NTC 10K B3950
- Heating/cooling device: SenseFuture matched TEC, 12 V, 6 A
- Temperature controller brand/model: SenseFuture TEC215
- Target temperature: 45 ℃
- Controller parameter settings: supply voltage 12 V; maximum output voltage percentage 80% (i.e., 12 V x 80% = 9.6 V),

Controller 1: PID parameters: P = 100000, I = 400, D = 0.

Controller 2: PID parameters: P = 50000, I = 150, D = 0

- Measured results: temperature-control stability: ±0.001 ℃ (24-hour test, ambient variation ±2 ℃)
  temperature measurement stability: ±0.002 ℃ (24-hour test, ambient variation ±2 ℃)

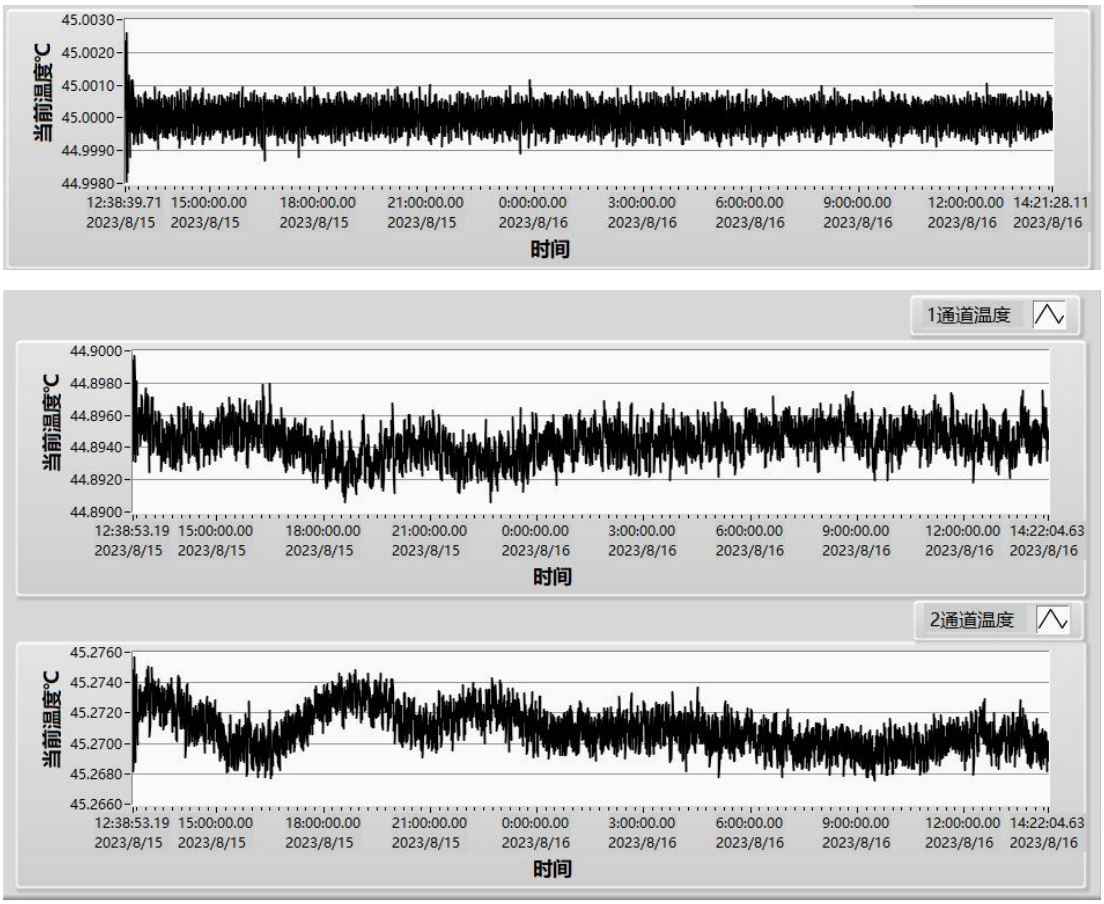

80 cm Gas Absorption Chamber Temperature Control Data (top: control data; middle and bottom: inlet/outlet temperature measurement data)

1.2 Isothermal Copper Block Temperature Cont

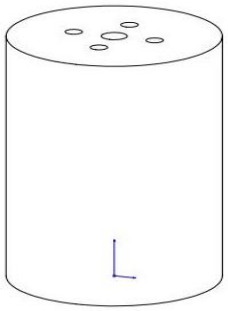

- Controlled object: A copper block 7 cm long and 5 cm
- Temperature sensor: SenseFuture matched NTC 10k
- Heating/cooling device: heating film
- Temperature controller brand/model: SenseFuture TE
- Target temperature: 50 ℃
- Controller parameter settings: supply voltage 12 V; maximum output voltage percentage 90% (i.e., 12 V x 90% = 10.8 V),

Controller 1: PID parameters: P = 80000, I = 500, D = 0.

- Measured results: temperature-control stability: ±0.0002 ℃ (6-hour test, ambient variation ±2 ℃)
  temperature measurement stability: ±0.001 ℃ (6-hour test, ambient variation ±2 ℃)

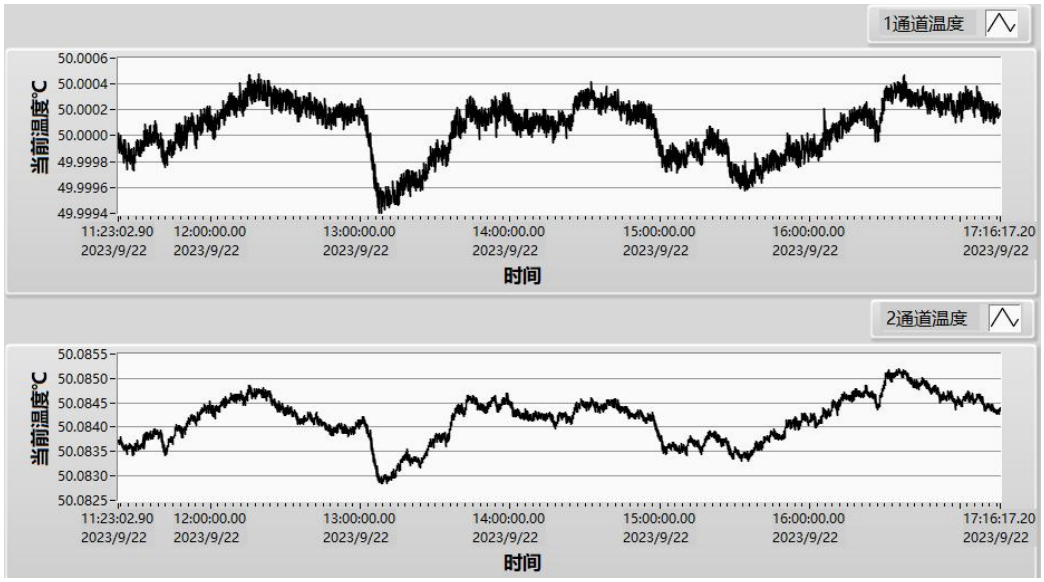

Isothermal Copper Block Temperature Control Data (top: control data; bottom: measurement data)

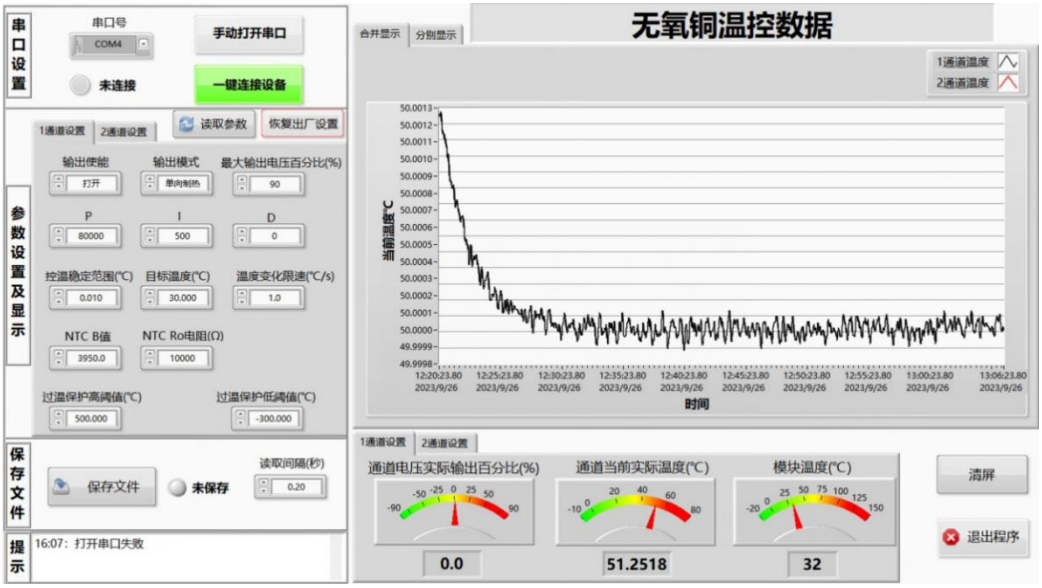

Short-Term Temperature Control Data of the Isothermal Copper Block

Customers and Partners

Universities and Research Institutes



High-Tech Enterprises



Version Change Log

Version	Change description	Change date	Reviewed by
1.0	Initial version	2024/3/1	YL/WYR
1.0-1.1.0	Updated	2026/5/20	WYR
1.1.0-1.1.1	Updated terminal model Updated outline dimensions Updated specifications	2026/10/26	WYR

Website & Store: www.sensefuture.com

Email: sales@sensefuture.com / rd@sensefuture.com

Tel: +86 18718688108

Address: Room 1308, Building A1, Sanhuan Technology Building, Fenghuang Subdistrict, Guangming District, Shenzhen, China

SenseFuture

Original Aspiration Shapes the Future;
Innovation Creates Value;
Sharing Brings People Together;

We look forward to win-win cooperation with you!

SenseFuture Technologies Co., Ltd.