SenseFuture

TEC107/115
Temperature Controller
PRODUCT MANUAL

Striving for the Bright Future of Precision Optoelectronic Measurement.

SenseFuture Technologies Co., Ltd.

00 Safety Notice

This section describes general safety information and safety precautions related to this product, in order to prevent personal injury caused by improper use and to prevent damage to this product or any product connected to it. To avoid potential hazards, always use this product as specified. Non-professional maintenance personnel must not open the enclosure for repair.

1. Safety Rules

- The product must be used strictly within the specified temperature and humidity ranges: temperature -55 to 60 °C; humidity 0 to 98% RH (non-condensing).
- This product is designed for use in a dry, well-ventilated indoor environment. Do not use it in damp locations or where it may be exposed to rain.

2. Operation and Protection Safety Requirements

📣 **Installation/removal protection:** Before removing the temperature controller, completely disconnect the power supply. Do not touch terminals or electronic components, or apply impact, while the unit is powered. When reinstalling the controller, avoid direct contact between electronic components and the enclosure.

📣 **ESD protection:** Before touching the controller, touch a grounded metal object to discharge static electricity from your body. During installation or removal, wear powder-free anti-static gloves to prevent sweat or oil from contaminating interfaces.

📣 **Cleaning requirements:** Wipe the product surface only with standard-grade alcohol. Do not use corrosive cleaning agents such as paint thinner.

📣 **Startup note:** The output turns on approximately 3 seconds after power-up (configurable if required). Consider this delay when configuring the control loop to avoid misjudging it as a fault.

📣 **Application limitations:** Do not use this product in scenarios that may cause serious life or property risks unless such risks are mitigated through the overall system design. For programmable operations, the manufacturer assumes no responsibility for direct or indirect consequences caused by user programming.

3. Emergency Handling Procedure

- If the temperature controller emits smoke, abnormal odor, abnormal noise, or shows any other abnormal condition, immediately cut off the power supply. Do not continue using or disassemble it by yourself;
- Record the fault details, such as the abnormal condition, time of occurrence, and operating scenario;
- Contact SenseFuture official after-sales support immediately (technical support: rd@sensefuture.com).

Follow the guidance of qualified personnel for further handling. Unauthorized repair is prohibited to prevent secondary damage.

01 Product Function

The TEC107/115 series controller is used mainly for temperature measurement and control of large sample chambers.



TEC107/115 Series Temperature Controller Product Image (product functions may be iterated)

02 Product Features

- Temperature measurement sensitivity: 0.0001℃; long-term measurement drift (24 h): <0.001℃.
- **Temperature control stability: ±0.001℃** (related to the controlled object and parameters), meeting most applications, including precision temperature control for semiconductor lasers.
- Selectable bipolar or unipolar Output.
- Maximum temperature change rate can be limited.
- Supports NTC thermistor temperature sensors.
- Supports high-power output (up to 24 V/15 A per channel).
- Multiple protection features, including overvoltage, overcurrent, and overtemperature.
- Parameters can be set directly through the display module or PC control module. Settings are retained after power-off.
- Supports TTL serial port and RS485 interfaces.
- Supports ASCII and Modbus protocols, providing an open platform.
- The TEC115 series temperature controller support solid-state relays.
- Supports 4-20 mA signal output.
- Supports 0-10 V signal output.

03 Specifications

Parameter	Model					
	TEC107D	TEC107L	TEC107	TEC115D	TEC115L	TEC115
Supported sensors	NTC, PT1000/PT100					
Measurable temperature range	-270 - 850℃					
Measurement resolution	0.01℃	0.001℃	0.0001℃	0.01℃	0.001℃	0.0001℃
Measurement drift caused by ambient temperature[1]	0.0001℃/℃					
Best temperature-control stability(related to your temperature-control fixture)	**±0.1**℃	**±0.01**℃	**±0.001**℃	**±0.1**℃	**±0.01**℃	**±0.001**℃
Communication method	TTL / RS485 serial ports (Modbus and ASCII)					
Supply voltage range	7 - 24V(short-term limit voltage: 28 V)					
Output polarity	Bidirectional, unidirectional, or communication-set selectable					
Output Voltage/Current	Supports 0-10 V and 4-20 mA signal output					
Number of output channels	1					
TEC Terminal Output Voltage Range	0 - ±90% * Vin V					
TEC Terminal Output Current Range (SSR: solid-state relay)	**0 - ±7A**			**0 - ±15A** **0 - ±80A/SSR**		
Output current limit	±10A			±20A		
PWM Output Frequency Range	0.1 - 5 kHz (Default: 10 Hz)					
Operating ambient temperature range	-55 - 60℃					
Operating ambient humidity range	0 - 98%RH					
Cooling requirement	When current exceeds 12 A, add cooling as needed.					
Protection Features	Multiple protections including overvoltage, overcurrent, and overtemperature; power-off memory					
PID parameters	Auto-tuning / user adjustable					
Dimensions	94.3*79.5*17.8 mm(±0.2 mm)					
Weight	Approx. 240 g					

Note: [1] Measurement drift of the board was tested using a 10K B3950 temperature calculation model.

04 Interface Introduction

1. Controller Pinout

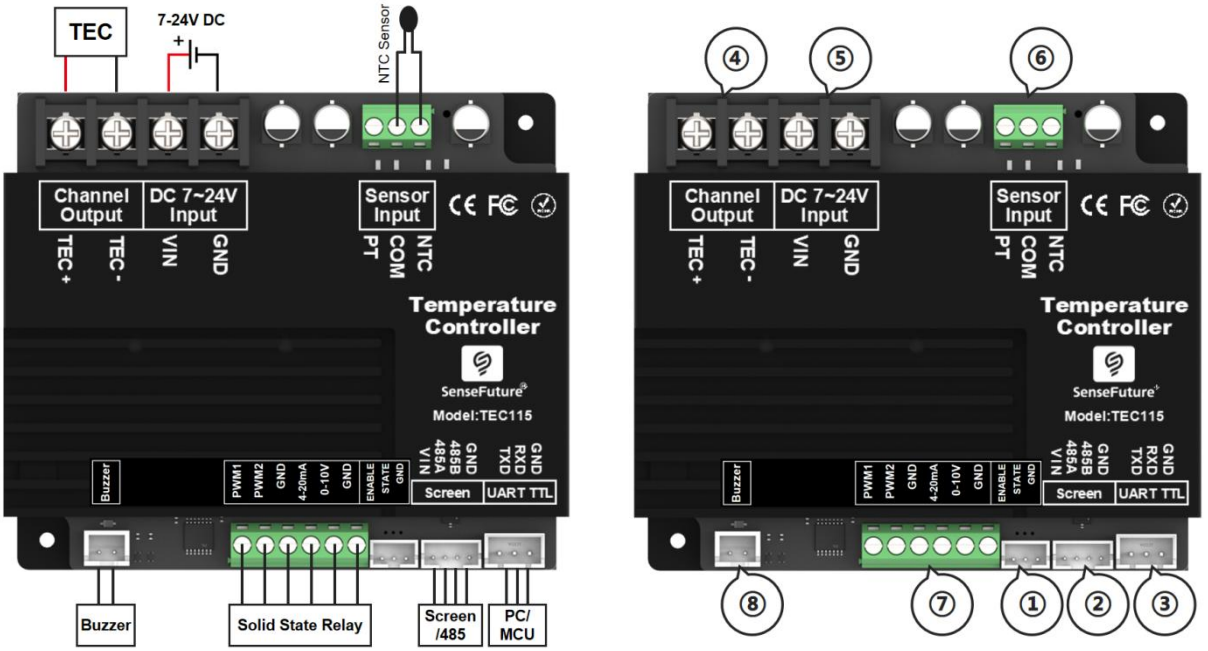

TEC107/115 Series Temperature Controller Wiring Diagram

Temperature Controller Pin Description Table

	Pin Name	Pin Type	Description (High: 3.3 V; Low: 0 V)	Connector Model
①	ENABLE	Input	Controller enable. High: output enabled; Low: output disabled.	PH2.0 3P
	STATE	Output	Controller over-temperature alarm output. High: (1) controller temperature exceeds its threshold; (2) channel 1 or 2 sensor temperature exceeds its high/low threshold. Low: no over-temperature abnormality.	
	GND	Input	Power input negative (low current).	
②	VIN	Input	Power input positive (directly connected to VIN).	PH2.0 4P
	485A	Output	RS485 A. Data bits: 8; stop bit: 1; parity: None; baud rate: 9600.	
	485B	Output	RS485 B. Data bits: 8; stop bit: 1; parity: None; baud rate: 9600.	
	GND	Input	Power input negative (low current). (GND recommended for RS485)	
③	TXD	Output	serial port transmit terminal, TTL level,, For PC software. Data bits: 8; stop bit: 1; parity: None; baud rate: 38400; level: 3.3 V.	XH2.54 3P
	RXD	Input	serial port receive terminal, TTL level,, For PC software. Data bits: 8; stop bit: 1; parity: None; baud rate: 38400; level: 3.3 V.	
	GND	Input	Power input negative (low current).	
④	TEC+	Output	Temperature-control current output positive, normally connected to TEC positive.	-

	TEC-	Output	Temperature-control current output negative, normally connected to TEC negative.	
⑤	VIN	Input	Power input positive, input range: 7-24 V.	-
	GND	Input	Power input negative (high current).	
⑥	1k	Input	Platinum RTD (Pt1000) interface (contact technical support before purchase).	-
	COM	Input	Common interface for Pt1000 and NTC.	
	10k	Input	Thermistor (NTC) interface.	
⑦	PWM1	Output	SSR input terminal 1. Default frequency: 10 Hz, adjustable.	-
	PWM2	Output	SSR input terminal 2. Default frequency: 10 Hz, adjustable.	
	GND	Input	Power input negative (low current).	
	4-20mA	Output	Outputs 4-20 mA based on temperature feedback and PID.	-
	0-10V	Output	Outputs 0-10 V based on temperature feedback and PID.	
	GND	Input	Power input negative (low current).	
⑧	VCC	Output	Buzzer alarm positive. Outputs high when a temperature-control error occurs.	XH2.54 2P
	GND	Output	Buzzer alarm negative terminal.	

2. Extended use: external SSR driving a TEC module: When driving a high-power load, the TEC115 series can control an SSR via the PWM terminal.

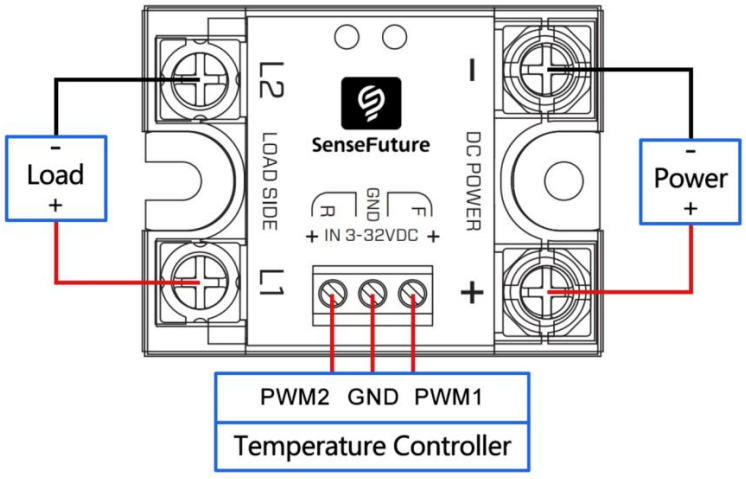

Solid-State Relay Wiring Diagram

- Use DD-type SSRs for DC devices and DA-type SSRs for AC devices.
- The SSR voltage must match the load rating, and its current rating must exceed total load current.

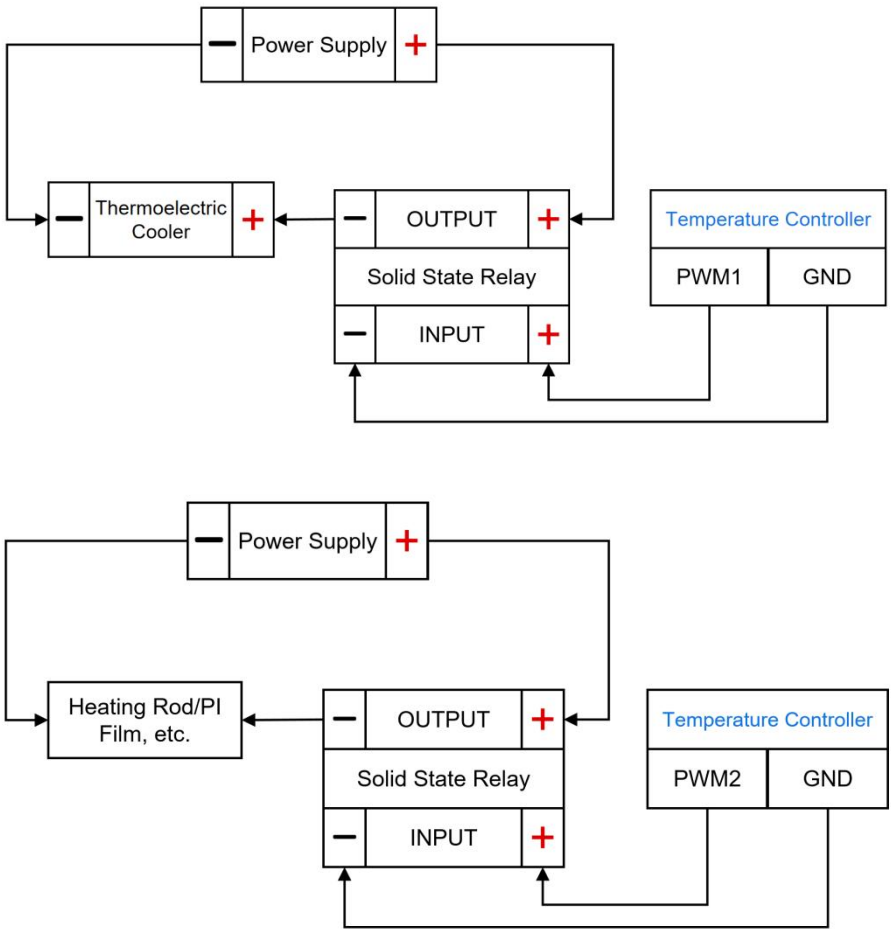

SSR wiring for cooling only (upper) and heating (lower)

05 Outline Dimensions (Tolerance: ±0.2 mm)

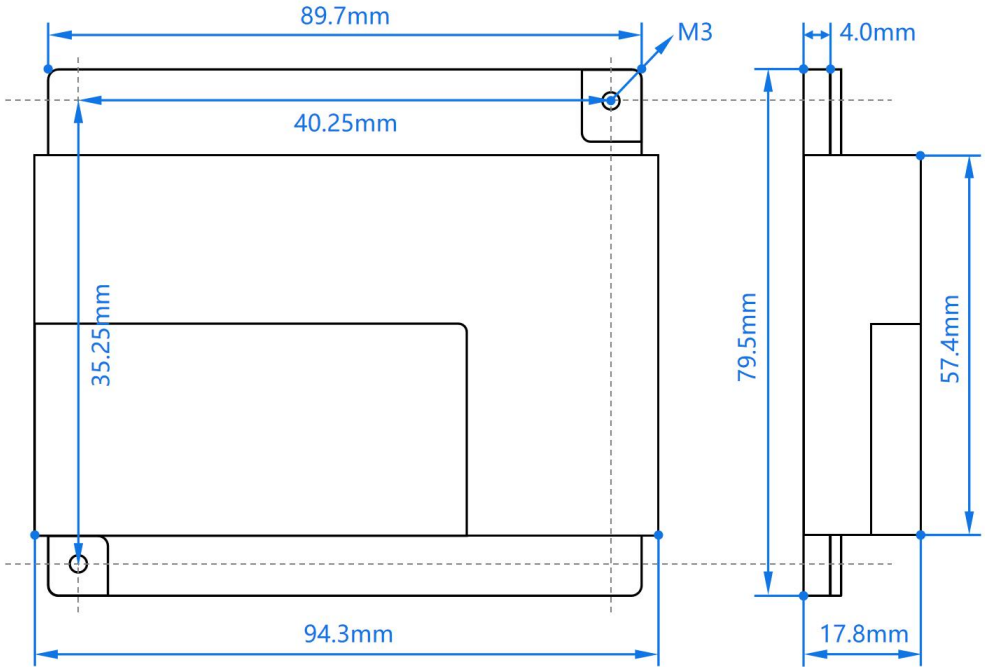

06 PC Software

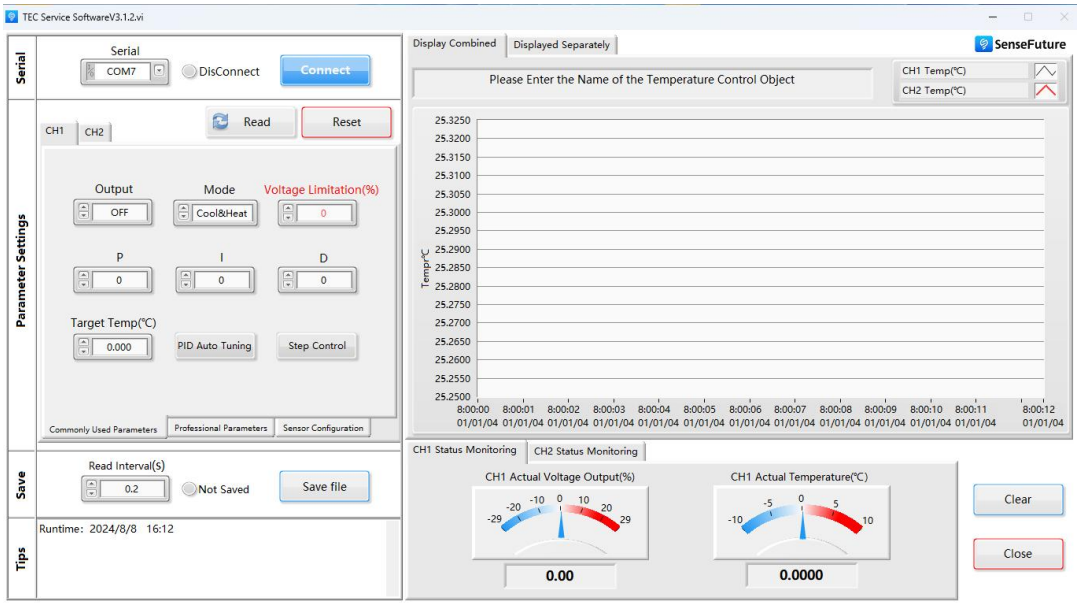

PC software, communication protocols, and other documents are available for download on the product detail pages of SenseFuture website(www.sensefuture.com).

07 Quick Start Guide

1. Materials List

Temperature controller kit (controller, NTC temperature sensor, USB-to-TTL communication cable), heating/cooling device (e.g., TEC module), switching power supply, PC, screwdriver, and several wires.

2. Operating Steps

(1)Wiring (using a NTC sensor and a TEC module as an example)

- **Step 1:** NTC sensor connection: connect the sensor to the controller NTC and COM pins. No polarity distinction is required.
- **Step 2:** TEC module: connect to the controller TEC output; observe polarity.
- **Step 3:** Power supply connection: connect the positive and negative terminals to the controller VIN and GND pins, observing polarity. Do not connect to 220 V mains power yet.
- **Step 4:** USB-to-TTL cable: connect it to the controller, but do not connect it to the PC yet.

After confirming the wiring is correct, connect to 220 V mains power.

(2)Software Setup (install the serial port driver before first use)

- **Step 1:** Serial port selection: open the serial-port drop-down list and note the existing ports. Connect the communication cable to the PC, click Refresh, select the new port, and click Serial Port Connection (the software currently supports 38400 baud only; modify the baud rate when using RS485).

- **Step 2:** Successful connection indication: "Open Serial Port" changes to "Close Serial Port".
- **Step 3:** Sensor configuration: set NTC R0 to 10KΩ, and B value to 3950.

For other sensors, refer to the tutorial for model selection with different sensor parameters.

- **Step 4:** Maximum output voltage percentage setting: maximum voltage output percentage < rated voltage of the TEC terminal device / supply voltage.For example, when both the maximum TEC voltage and the supply voltage are 12 V, set the maximum output voltage percentage to 90% to avoid burnout.
- **Step 5:** Start control: enter the target temperature, enable the output, and the controller starts temperature control.
- **Step 6:** PID parameter setting: click PID auto-tuning and wait for automatic tuning (this may take several minutes, depending on the controlled object and heat sink size), or manually adjust the PID parameters (refer to the simple PID tutorial).

08 Temperature Control System Customization Service

We have comprehensive temperature-control solution capabilities and have customized temperature-control systems for research institutes and universities. For customized temperature-control systems, please contact official customer service (rd@sensefuture.com).

Customers and Partners

Universities and Research Institutes

清華大學 Tsinghua University
北京大學 PEKING UNIVERSITY
復旦大學 FUDAN UNIVERSITY
上海交通大學 SHANGHAI JIAO TONG UNIVERSITY
浙江大學 ZHEJIANG UNIVERSITY
中国科学院大学 University of Chinese Academy of Sciences
中国计量科学研究院 National Institute of Metrology, China
THE HONG KONG POLYTECHNIC UNIVERSITY 香港理工大學
电子科技大学 University of Electronic Science and Technology of China
深圳大学 SHENZHEN UNIVERSITY
Imperial College London
SFU SIMON FRASER UNIVERSITY
PRINCETON UNIVERSITY
Berkeley UNIVERSITY OF CALIFORNIA
NUS National University of Singapore
Caltech
中国科学院半导体研究所 Institute of Semiconductors, Chinese Academy of Sciences
中国科学院 长春光学精密机械与物理研究所 Changchun Institute of Optics, Fine Mechanics and Physics, Chinese Academy of Sciences

High-Tech Enterprises

Version Change Log

Version	Change description	Change date	Reviewed by
1.0	Initial version	2024/3/1	YL/WYR
1.0-1.1.0	Updated	2026/5/26	WYR
1.1.0-1.1.1	Updated terminal model Updated outline dimensions Updated specifications	2026/10/26	WYR

Website & Store: www.sensefuture.com

Email: sales@sensefuture.com / rd@sensefuture.com

Tel: +86 18718688108

Address: Room 1308, Building A1, Sanhuan Technology Building, Fenghuang Subdistrict, Guangming District, Shenzhen, China

SenseFuture

Original Aspiration Shapes the Future;
Innovation Creates Value;
Sharing Brings People Together;

We look forward to win-win cooperation with you!